Worm gear

Properties:

General:	Single-stage worm gear For use in combination with our motors. Special design as a free-standing gear unit with ball-bearing ingoing shaft Lifetime grease lubrication
Housing:	Massive aluminum, mounting possibilities from all accessible sides
Output:	Power deviation 90°, second shaft end possible Self-locking with great gear reduction (η < 50%)
Options:	Special shaft, second shaft end

Loading capacity	Max. radial force	N	300
	Max. axial force	N	150
	Max. input speed	rpm	4500
	Temperature range	°C	-20° – +40°
Mounting	Shaft diameter	mm	12
	Weight	kg	0.82
	Mounting type (standard)		Foot

Gear ratios

i	M (Nm)	η
5	15.3	0.78
7.25	14.7	0.71
10	16	0.66
15	15.3	0.57
20	14.8	0.51
30	15	0.40
50	12.5	0.28
90	9.1	0.18
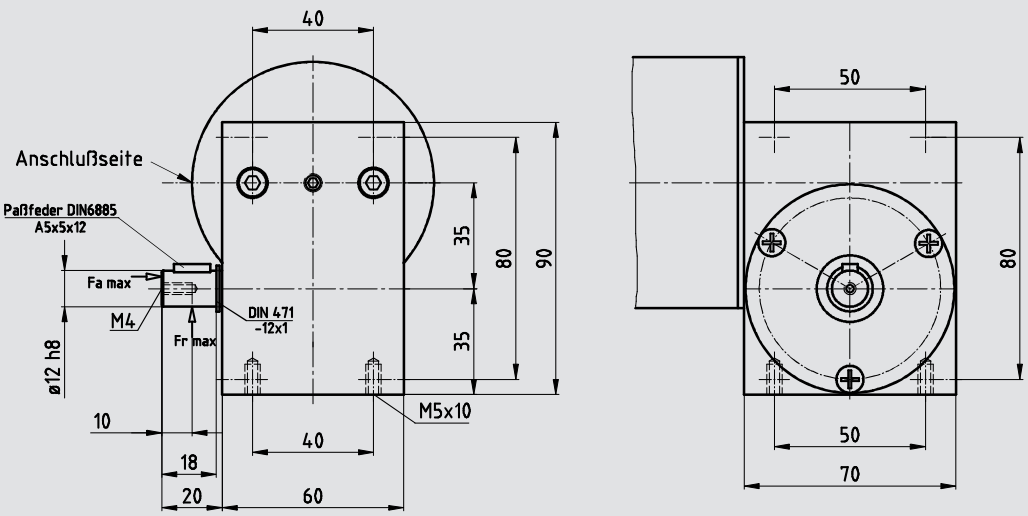
Dimensions